elevas
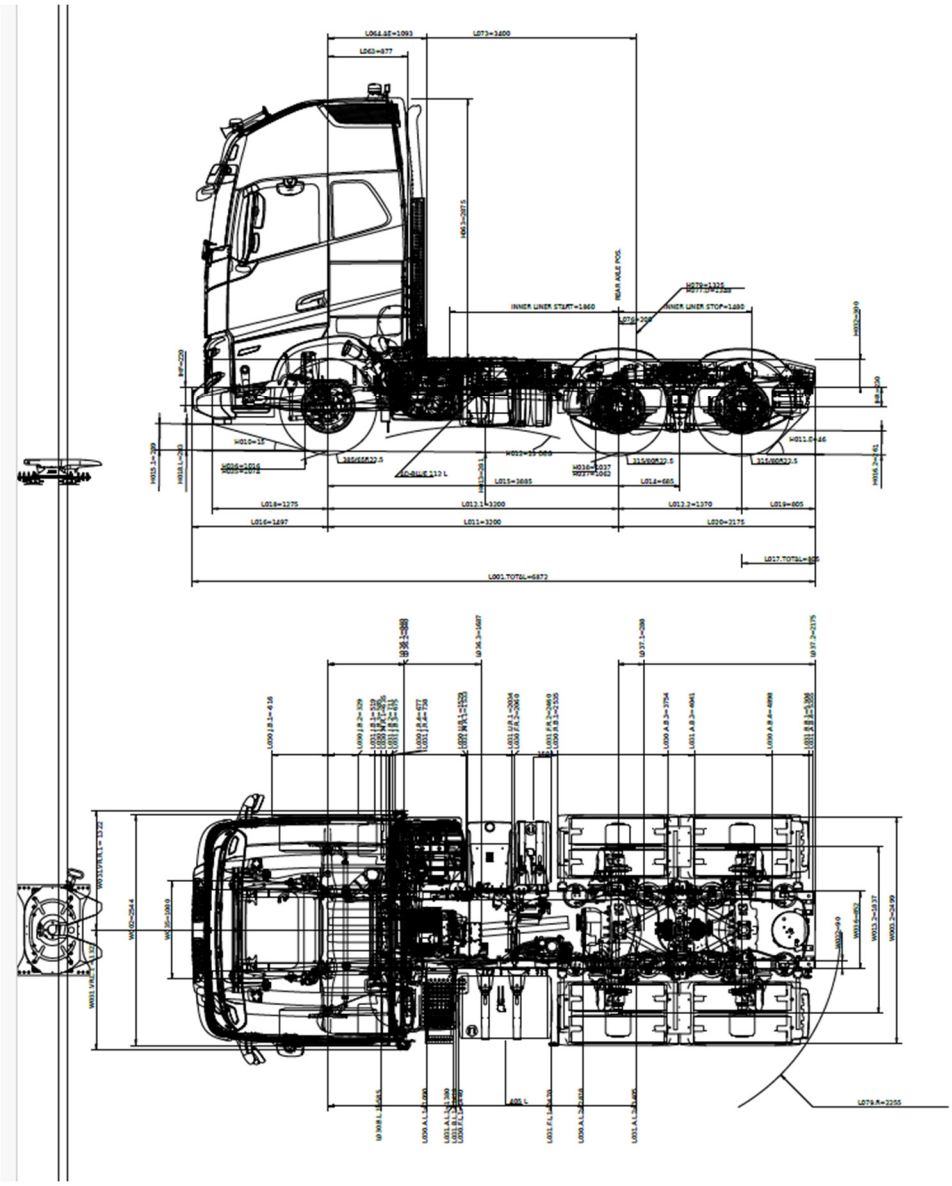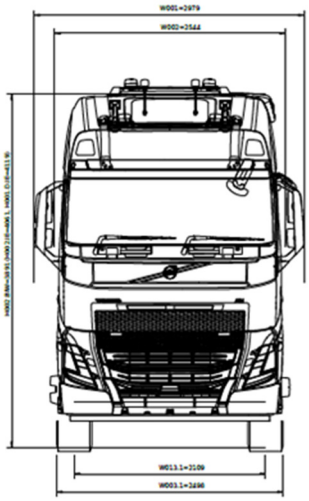
STGO CAT 3 6x4 TRACTOR UNIT